LAND SEA AIR SPACE

AEROSPACE STANDARD

Society of Automotive Engineers, Inc.
TWO PENNSYLVANIA PLAZA, NEW YORK, N.Y. 10001

AS 1006A

Issued 3-15-66
Revised 11-1-68

CROSS, REDUCER, FLARELESS TUBE

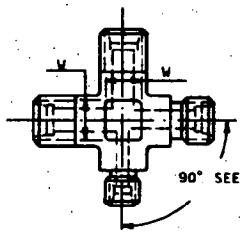

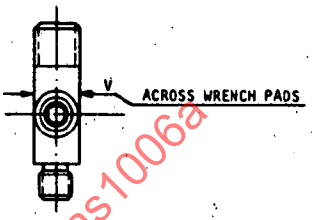

REDUCER COMBINATIONS

STYLE I

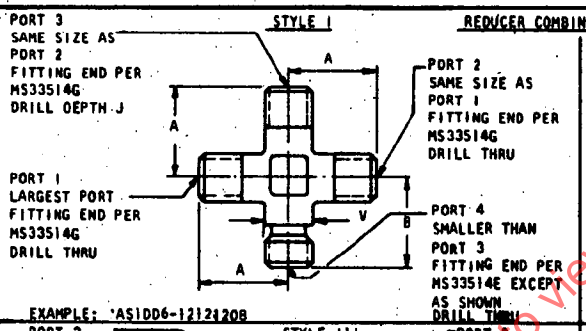

EXAMPLE: AS1DD6-12121208

STYLE II

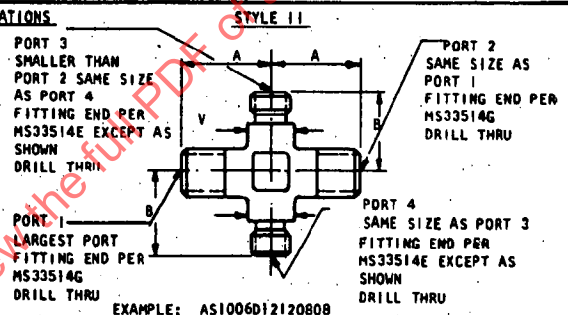

EXAMPLE: AS1006D12120808

STYLE III

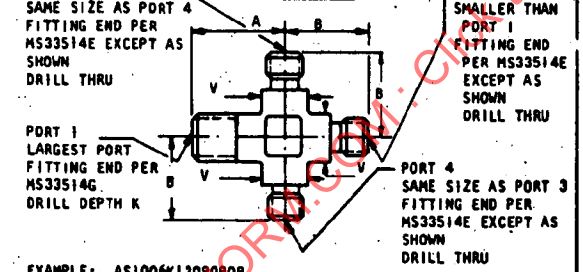

EXAMPLE: AS1006K12080808

STYLE IV

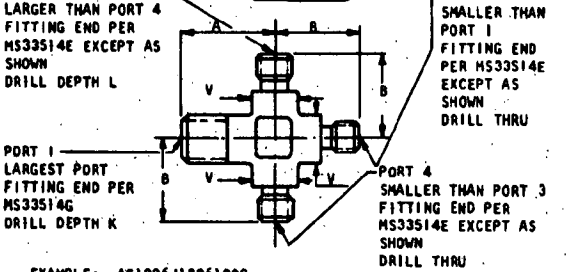

EXAMPLE: AS1006J12061008

STYLE V

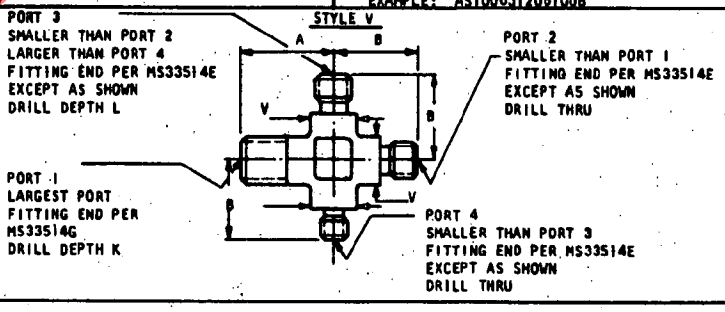

EXAMPLE: AS1006J12100806

STYLE VI

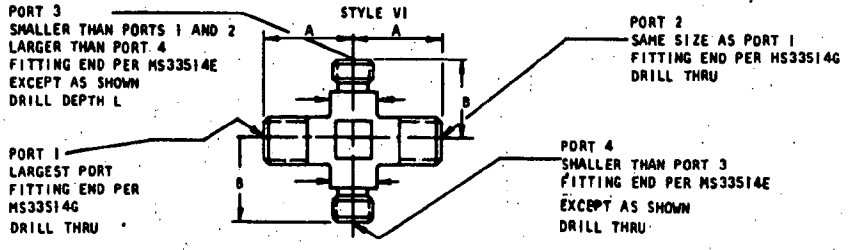

EXAMPLE: AS1DD610100806

SAENORM.COM : Click to view the full PDF of as1006a

SAE Technical Board rules provide that: "All technical reports, including standards approved and practices recommended, are advisory only. Their use by anyone engaged in industry or trade is entirely voluntary. There is no agreement to adhere to any SAE standard or recommended practice, and no commitment to conform to or be guided by any technical report. In formulating and approving technical reports, the Board and its Committees will not investigate or consider patents which may apply to the subject matter. Prospective users of the report are responsible for protecting themselves against liability for infringement of patents."

Copyright 1968 by Society of Automotive Engineers, Inc.